Control valve in 3-way-form (3-way mixing valve)
DN 300

ARI-STEVI® 423
Electric actuator ARI-PREMIO

- Enclosure IP 65
- 2 torque switches
- Handwheel
- Additional devices available, e.g. potentiometer

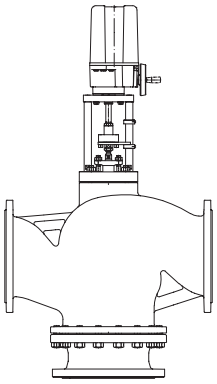

Page 2

ARI-STEVI® 423
Electric actuator CS

- Enclosure IP 65
- 2 torque switches
- Handwheel
- Additional devices available, e.g. potentiometer

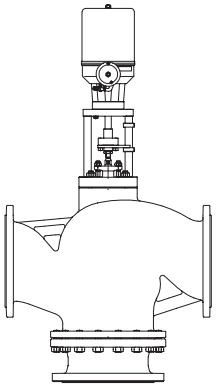

Page 6

ARI-STEVI® 423
Electric actuator AUMA SAR

- Electric multiturn actuator, capable of high closing pressures
- Enclosure IP 67
- 2 torque switches
- 2 travel switches
- Handwheel
- Overheating protection for motor as standard
- Additional devices available, e.g. potentiometer
- Explosion proof version available

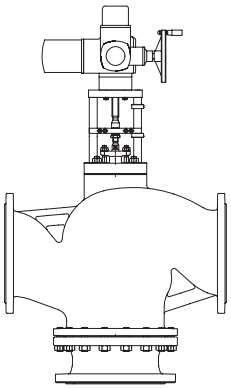

Page 10

ARI-STEVI® 423
Pneumatic actuator ARI-DP

- Reversible pneumatic actuator
- Actuator with rolling diaphragm
- Air supply pressure max. 6 bar
- Stem protection by bellow
- Maintenance-free O-ring sealing
- Assembly of additional devices acc. to DIN IEC 60534-6

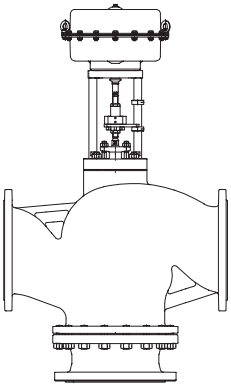

Page 14

Features:

- Precision guided stem
- Burnished stem
- Replaceable seat and plug
- 1 Screwed seat ring
- Reducible kvs-values
- Rangeability 30 : 1
- Post guided plug
- Travel indicator

Control valve in 3-way-form with electric actuator ARI-PREMIO

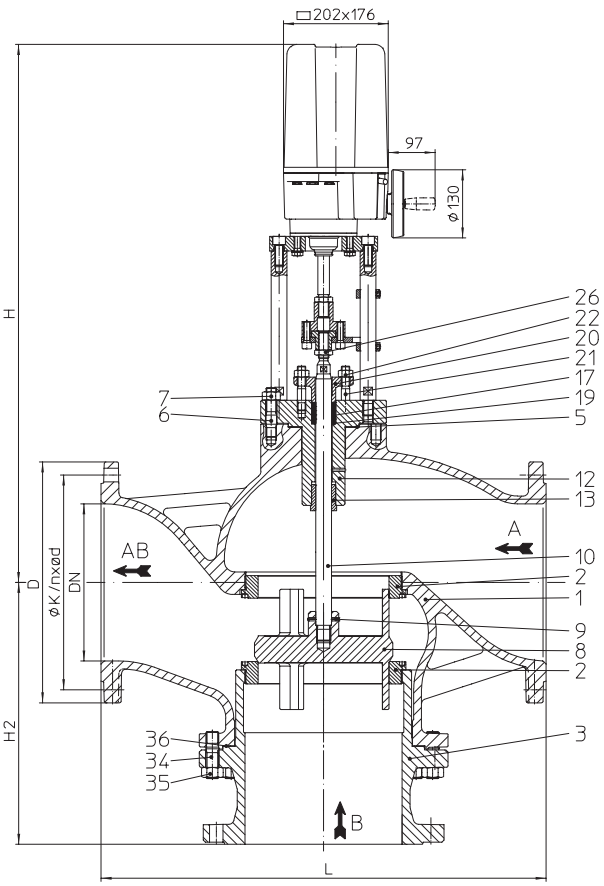

Fig. 423

Figure	Nominal pressure	Material	Nominal diameter
22.423	PN16	EN-JS1049	DN300

Stem sealing

Fig. 423:
- PTFE-packing -10°C to +250°C
- Pure graphite-packing -10°C to +450°C
- EPDM-stem sealing 0°C to +130°C

Plug design
- V-port plug

Guiding
- Port guiding

Flow characteristic
- linear

Rangeability
- 30 : 1

Shut off class (seat / plug leakage classes)
- Metal seat - Leakage class IV acc. to DIN EN 1349 or IEC 60534-4

Closing pressures refer to page 4.

Technical data for actuator refer to data sheet.

Selection of possible applications

Heating-, Ventilation- and Air-Conditioning- Systems, etc.
(other applications on request)

Selection of possible flow media

Water, Water with cold-protection

(other flow media on request)

Dimensions and weights

DN				300
L			(mm)	850
H2			(mm)	500
Fig. 423	H		(mm)	1027
	ARI-PREMIO 12 kN	PN16	(kg)	ca. 500
Fig. 423	H		(mm)	1027
	ARI-PREMIO 15 kN	PN16	(kg)	ca. 500
Standard-flange dimensions refer to page 19.				

Face-to-face dimension FTF series 1 according to DIN EN 558

Parts

Pos.	Description	Fig. 22.423
1	Body	EN-GJS-400-18U-LT, EN-JS1049
2	Seat ring *	X20Cr13+QT, 1.4021+QT
3	Bottom flange	EN-GJS-400-18U-LT, EN-JS1049
5	Gasket *	Pure graphite (CrNi laminated with graphite)
6	Studs	25CrMo4, 1.7218
7	Hexagon nut	C35E, 1.1181
8	Plug *	X20Cr13+QT, 1.4021+QT
9	Straight pin *	X10CrNi18-8, 1.4310
10	Stem *	X20Cr13+QT, 1.4021+QT
12	Stuffing box housing	P250 GH, 1.0460
13	Guide bushing	X20Cr13+QT, 1.4021+QT (hardened)
17	Packing ring *	PTFE or Pure graphite
19	Washer *	X5CrNi18-10, 1.4301
20	Packing box flange	EN-GJS-400-18U-LT, EN-JS1049
21	Studs	25CrMo4, 1.7218
22	Hexagon nut	C35E, 1.1181
26	Hexagon nut	17H-A4G
34	Studs	25CrMo4, 1.7218
35	Hexagon nut	C35E, 1.1181
36	Gasket *	Pure graphite (CrNi laminated with graphite)
* Spare parts		

Information / restriction of technical rules need to be observed!
A production allowance acc. to TRB 801 No. 45 exists
The engineer, designing a system or a plant, is responsible for the selection of the correct valve.

max. permissible closing pressures for both seat positions on flow-to-open P2 = 0
Observe restrictions by Pressure-temperature-ratings, refer to page 19.

Mixing function	DN		300	
AB A B	Standard Kvs-values	Seat-Ø A/B (mm)		250
		Kvs-value		1500
		Travel (mm)		75
	Reduced Kvs-values	Seat-Ø A/B (mm)	250	
		Kvs-value	1000	
		Travel (mm)	65	
Max. differential pressure drop (bar)			10	10
Actuator [1] **ARI-PREMIO 12 kN**	Closing pressure (bar)		1,9	1,9
	Operating time [2] (s) (Op. speed 0,38 mm/s)		171	197
Actuator [1] **ARI-PREMIO 15 kN**	Closing pressure (bar)		2,5	2,5
	Operating time [2] (s) (Op. speed 0,38 mm/s)		171	197

[1] Motor voltage: 230V 50Hz 1~ (standard)
Other voltages: 24V 50Hz 1~; 24V =; 110V 50/60Hz 1~; 230V 60Hz 1~; 400V 50Hz 3~; 440V 60Hz 3~
Technical data for actuator refer to data sheet ARI-PREMIO.

[2] Indicated operating times with 50Hz.

Control valve in 3-way-form with electric actuator CS

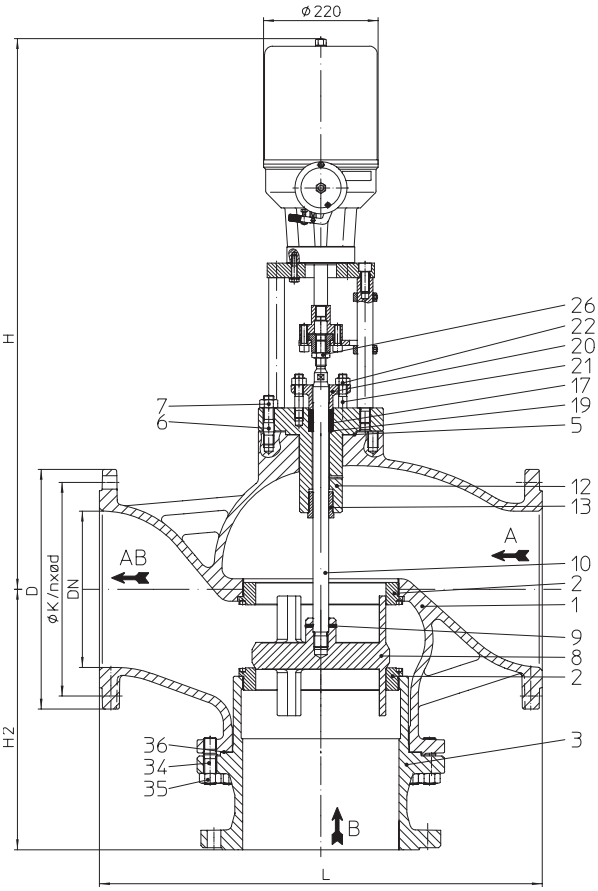

Fig. 423

Figure	Nominal pressure	Material	Nominal diameter
22.423	PN16	EN-JS1049	DN300

Stem sealing

Fig. 423:
- PTFE-packing -10°C to +250°C
- Pure graphite-packing -10°C to +450°C
- EPDM-stem sealing 0°C to +130°C

Plug design
- V-port plug

Guiding
- Port guiding

Flow characteristic
- linear

Rangeability
- 30 : 1

Shut off class (seat / plug leakage classes)
- Metal seat - Leakage class IV acc. to DIN EN 1349 or IEC 60534-4

Closing pressures refer to page 8.

Technical data for actuator refer to data sheet.

Selection of possible applications

Heating-, Ventilation- and Air-Conditioning- Systems, etc.
(other applications on request)

Selection of possible flow media

Water, Water with cold-protection

(other flow media on request)

Dimensions and weights

DN				300
L			(mm)	850
H2			(mm)	500
Fig. 423	H		(mm)	1057
	CS 27	PN16	(kg)	approx. 510
Standard-flange dimensions refer to page 19.				

Face-to-face dimension FTF series 1 according to DIN EN 558

Parts

Pos.	Description	Fig. 22.423
1	Body	EN-GJS-400-18U-LT, EN-JS1049
2	Seat ring *	X20Cr13+QT, 1.4021+QT
3	Bottom flange	EN-GJS-400-18U-LT, EN-JS1049
5	Gasket *	Pure graphite (CrNi laminated with graphite)
6	Studs	25CrMo4, 1.7218
7	Hexagon nut	C35E, 1.1181
8	Plug *	X20Cr13+QT, 1.4021+QT
9	Straight pin *	X10CrNi18-8, 1.4310
10	Stem *	X20Cr13+QT, 1.4021+QT
12	Stuffing box housing	P250 GH, 1.0460
13	Guide bushing	X20Cr13+QT, 1.4021+QT (hardened)
17	Packing ring *	PTFE or Pure graphite
19	Washer *	X5CrNi18-10, 1.4301
20	Packing box flange	EN-GJS-400-18U-LT, EN-JS1049
21	Studs	25CrMo4, 1.7218
22	Hexagon nut	C35E, 1.1181
26	Hexagon nut	17H-A4G
34	Studs	25CrMo4, 1.7218
35	Hexagon nut	C35E, 1.1181
36	Gasket *	Pure graphite (CrNi laminated with graphite)
* Spare parts		

Information / restriction of technical rules need to be observed!

A production allowance acc. to TRB 801 No. 45 exists

The engineer, designing a system or a plant, is responsible for the selection of the correct valve.

max. permissible closing pressures for both seat positions on flow-to-open P2 = 0
Observe restrictions by Pressure-temperature-ratings, refer to page 19.

Mixing function	**DN**		**300**	
AB ⇦ A, B	Standard Kvs-values	Seat-Ø A/B (mm)		250
		Kvs-value		1500
		Travel (mm)		75
	Reduced Kvs-values	Seat-Ø A/B (mm)	250	
		Kvs-value	1000	
		Travel (mm)	65	
Max. differential pressure drop (bar)			10	10
Actuator [1] **CS 27 24 kN**	Closing pressure (bar)		4,3	4,3
	Operating time [2] (s) (Op. speed 0,84 mm/s)		77	89

[1] Motor voltage: 230V 50Hz 1~
Other voltages: 24V 50Hz 1~; 400V 50Hz 3~
Technical data for actuator refer to data sheet CS.

[2] Indicated operating times with 50Hz.

Control valve in 3-way-form with electric actuator AUMA

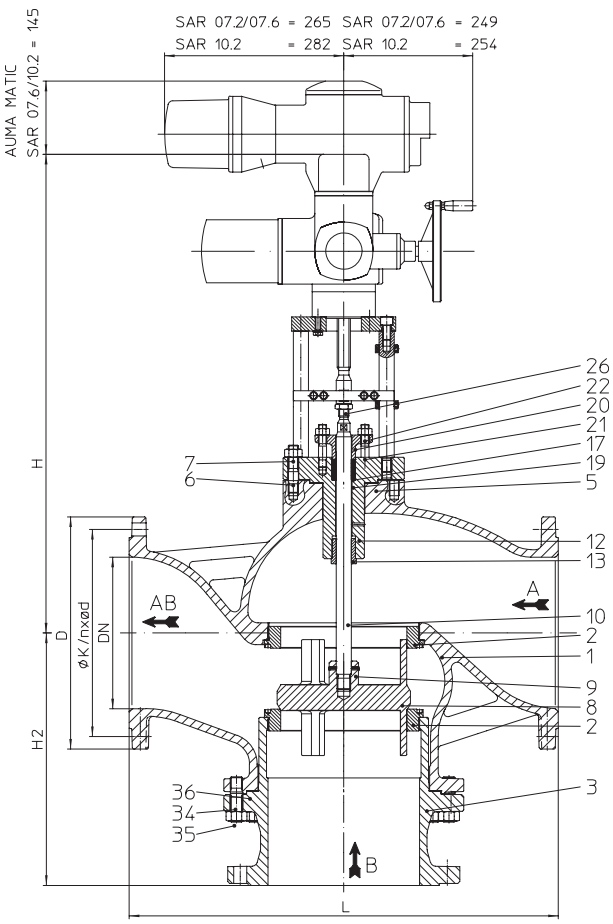

Fig. 423

Figure	Nominal pressure	Material	Nominal diameter
22.423	PN16	EN-JS1049	DN300

Stem sealing

Fig. 423:
- PTFE-packing -10°C to +250°C
- Pure graphite-packing -10°C to +450°C
- EPDM-stem sealing 0°C to +130°C

Plug design
- V-port plug

Guiding
- Port guiding

Flow characteristic
- linear

Rangeability
- 30 : 1

Shut off class (seat / plug leakage classes)
- Metal seat - Leakage class IV acc. to DIN EN 1349 or IEC 60534-4

Closing pressures refer to page 12.

Technical data for actuator refer to data sheet.

Selection of possible applications

Heating-, Ventilation- and Air-Conditioning- Systems, etc.
(other applications on request)

Selection of possible flow media

Water, Water with cold-protection
(other flow media on request)

Dimensions and weights

DN				300
L			(mm)	850
H2			(mm)	500
Fig. 423	H		(mm)	936
	AUMA SAR 07.2	PN16	(kg)	approx. 518
	H		(mm)	936
	AUMA SAR 07.6	PN16	(kg)	approx. 518
	H		(mm)	951
	AUMA SAR 10.2	PN16	(kg)	approx. 522
Standard-flange dimensions refer to page 19.				**(For version with AUMA SAR Ex other heights.)**

Face-to-face dimension FTF series 1 according to DIN EN 558

Parts

Pos.	Description	Fig. 22.423
1	Body	EN-GJS-400-18U-LT, EN-JS1049
2	Seat ring *	X20Cr13+QT, 1.4021+QT
3	Bottom flange	EN-GJS-400-18U-LT, EN-JS1049
5	Gasket *	Pure graphite (CrNi laminated with graphite)
6	Studs	25CrMo4, 1.7218
7	Hexagon nut	C35E, 1.1181
8	Plug *	X20Cr13+QT, 1.4021+QT
9	Straight pin *	X10CrNi18-8, 1.4310
10	Stem *	X20Cr13+QT, 1.4021+QT
12	Stuffing box housing	P250 GH, 1.0460
13	Guide bushing	X20Cr13+QT, 1.4021+QT (hardened)
17	Packing ring *	PTFE or Pure graphite
19	Washer *	X5CrNi18-10, 1.4301
20	Packing box flange	EN-GJS-400-18U-LT, EN-JS1049
21	Studs	25CrMo4, 1.7218
22	Hexagon nut	C35E, 1.1181
26	Hexagon nut	17H-A4G
34	Studs	25CrMo4, 1.7218
35	Hexagon nut	C35E, 1.1181
36	Gasket *	Pure graphite (CrNi laminated with graphite)
* Spare parts		

Information / restriction of technical rules need to be observed!
A production allowance acc. to TRB 801 No. 45 exists
The engineer, designing a system or a plant, is responsible for the selection of the correct valve.

max. permissible closing pressures for both seat positions on flow-to-open P2 = 0
Observe restrictions by Pressure-temperature-ratings, refer to page 19.

Mixing function	DN			300	
AB ← A, B	Standard Kvs-values	Seat-Ø A/B (mm)			250
		Kvs-value			1500
		Travel (mm)			75
	Reduced Kvs-values	Seat-Ø A/B (mm)		250	
		Kvs-value		1000	
		Travel (mm)		65	
Max. differential pressure drop (bar)				10	10
Actuator [1] **AUMA SAR 07.2** Output drive Form A TR 20 x 4 - LH	Closing pressure (bar)	shut off		2,8	2,8
		controlling [3]		1,6	1,6
	Torque (Nm)			30	
	Operating time [2] (s)			122	141
	Output drive (rpm)			8	8
Actuator [1] **AUMA SAR 07.6** Output drive Form A TR 26 x 5 - LH	Closing pressure (bar)	shut off		4,1	4,1
		controlling [3]		2,2	2,2
	Torque (Nm)			60	
	Operating time [2] (s)			71	82
	Output drive (rpm)			11	11
Actuator [1] **AUMA SAR 10.2** Output drive Form A TR 26 x 5 - LH	Closing pressure (bar)	shut off		8,8	8,8
		controlling [3]		4,5	4,5
	Torque (Nm)			120	
	Operating time [2] (s)			71	82
	Output drive (rpm)			11	11

[1] Motor voltage: 400V 50Hz 3~
(Other voltages on request)
Technical data for actuator refer to price list.

[2] Indicated operating times with 50Hz.

[3] Restrictions through max. permissible torque of the actuator at controlling operation.

Control valve in 3-way-form with pneumatic actuator DP

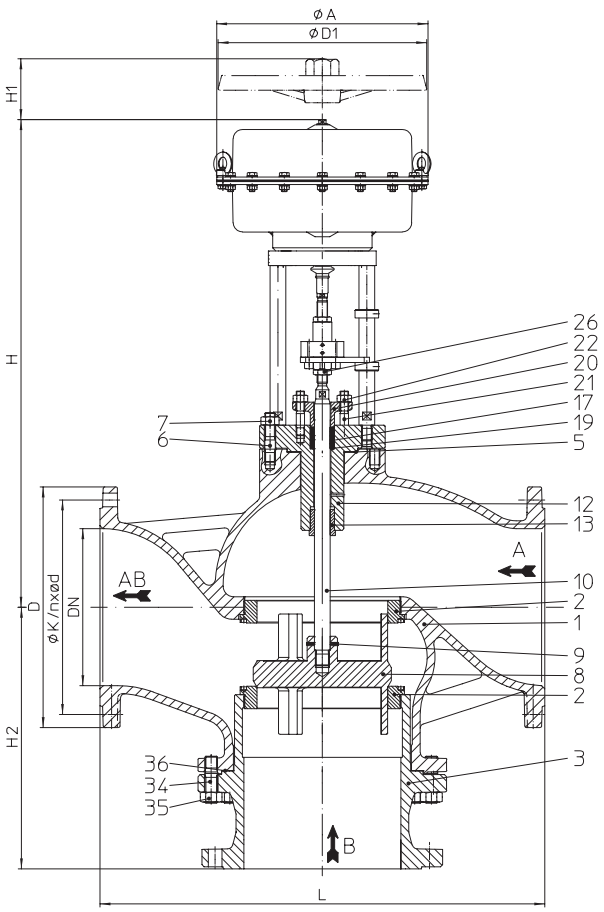

Fig. 423

Figure	Nominal pressure	Material	Nominal diameter
22.423	PN16	EN-JS1049	DN300

Stem sealing

Fig. 423:
- PTFE-packing -10°C to +250°C
- Pure graphite-packing -10°C to +450°C
- EPDM-stem sealing 0°C to +130°C

Plug design
- V-port plug

Guiding
- Port guiding

Flow characteristic
- linear

Rangeability
- 30 : 1

Shut off class (seat / plug leakage classes)
- Metal seat - Leakage class IV acc. to DIN EN 1349 or IEC 60534-4

Closing pressures refer to page 16.

Technical data for actuator refer to data sheet.

Selection of possible applications

Heating-, Ventilation- and Air-Conditioning- Systems, etc.
(other applications on request)

Selection of possible flow media

Water, Water with cold-protection
(other flow media on request)

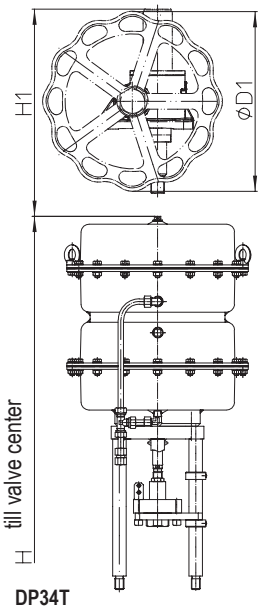

DP34T

Failure position dependent on valve duty.

Retracted stem on air failure:
- with a mixing valve port A -> AB is closed

Extended stem on air failure:
- with a mixing valve port B -> AB is closed

Top mounted handwheel

Actuator		DP34	DP34T
Ø D1	(mm)	397	400
H1	(mm)	458	613
Weight	(kg)	17	41

Technical data for actuator refer to data sheet DP32-34Tri.

Dimensions and weights

DN				300
L			(mm)	850
H2			(mm)	500
Ø A			(mm)	405
Fig. 423	DP34	H	(mm)	932
		PN16	(kg)	approx. 544
	DP34T	H	(mm)	1149
		PN16	(kg)	approx. 615
Standard-flange dimensions refer to page 19.				

Face-to-face dimension FTF series 1 according to DIN EN 558

Parts

Pos.	Description	Fig. 22.423
1	Body	EN-GJS-400-18U-LT, EN-JS1049
2	Seat ring *	X20Cr13+QT, 1.4021+QT
3	Bottom flange	EN-GJS-400-18U-LT, EN-JS1049
5	Gasket *	Pure graphite (CrNi laminated with graphite)
6	Studs	25CrMo4, 1.7218
7	Hexagon nut	C35E, 1.1181
8	Plug *	X20Cr13+QT, 1.4021+QT
9	Straight pin *	X10CrNi18-8, 1.4310
10	Stem *	X20Cr13+QT, 1.4021+QT
12	Stuffing box housing	P250 GH, 1.0460
13	Guide bushing	X20Cr13+QT, 1.4021+QT (hardened)
17	Packing ring *	PTFE or Pure graphite
19	Washer *	X5CrNi18-10, 1.4301
20	Packing box flange	EN-GJS-400-18U-LT, EN-JS1049
21	Studs	25CrMo4, 1.7218
22	Hexagon nut	C35E, 1.1181
26	Hexagon nut	17H-A4G
34	Studs	25CrMo4, 1.7218
35	Hexagon nut	C35E, 1.1181
36	Gasket *	Pure graphite (CrNi laminated with graphite)
* Spare parts		

Information / restriction of technical rules need to be observed!
A production allowance acc. to TRB 801 No. 45 exists
The engineer, designing a system or a plant, is responsible for the selection of the correct valve.

max. permissible closing pressures for both seat positions on flow-to-open P2 = 0
Observe restrictions by Pressure-temperature-ratings, refer to page 19.

Spring closes port A -> AB or Spring **closes port B ->** AB

Mixing function	**DN**				**300**	
AB ← A, B	Standard Kvs-values	Seat-Ø A/B (mm)				250
		Kvs-value				1500
		Travel (mm)				75
	Reduced Kvs-values	Seat-Ø A/B (mm)			250	
		Kvs-value			1000	
		Travel (mm)			65	
Max. differential pressure drop (bar)					10	10
Actuator **DP34**	Spring range (bar)	1,0 - 2,0	Air supply pressure min. (bar)	3,0	1,1	
		2,0 - 4,0		6,0	2,6	
Actuator **DP34T**		0,55 - 2,4		3,0		1,2
		1,0 - 2,0		3,0	2,6 a)	
		2,0 - 4,0		6,0	5,8	

Air supply pressure max. of pneumatic actuators DP: max. permissible 6 bar
Air supply pressure max. limit of control valve: max. permissible a) 5 bar b) 4,5 bar c) 4 bar d) 3,5 bar e) 3 bar

Standard-flange dimensions

Flanges acc. to DIN EN 1092-1/-2 (Flange holes / -thickness tolerances acc. to DIN 2533/2544/2545)

DN			300
PN16	ØD	(mm)	460
PN16	ØK	(mm)	410
PN16	n x Ød	(mm)	12 x 26

Pressure-temperature-ratings acc. to DIN EN 1092-2

Material			-10°C to 120°C	150°C	200°C	250°C	300°C	350°C
EN-JS1049	PN16	(bar)	16	15,5	14,7	13,9	12,8	11,2

Intermediate values for max. permissible operational pressures can be determined by linear interpolation of the given temperature / pressure chart.

Please indicate when ordering:

- Figure-No.
- Nominal diameter
- Nominal pressure
- Body material
- Plug design
- Kvs-value
- Stem sealing
- Actuator
- Special design / accessories

Example:

Figure 22.423, Nominal diameter DN300, Nominal pressure PN16, Body material EN-JS1049, Mixing construction, Kvs 1500, Stem sealing: Pure graphite-packing, with pneumatic actuator DP34.

Dimensions in mm
Weights in kg
Pressures in barg (gauge)
1 bar ≙ 10^5 Pa ≙ 0,1 MPa
Kvs in m^3/h

Stem sealing

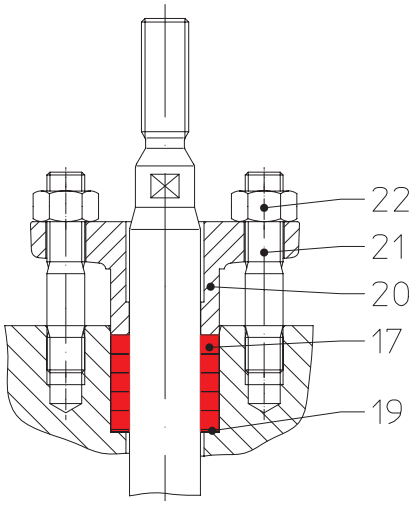

Pos.	Description	
17	Packing ring *	PTFE or Pure graphite
19	Washer *	X5CrNi18-10, 1.4301
20	Packing box flange	EN-GJS-400-18U-LT, EN-JS1049
21	Studs	25CrMo4, 1.7218
22	Hexagon nut	C35E, 1.1181
* Spare parts		

PTFE- / gland packing

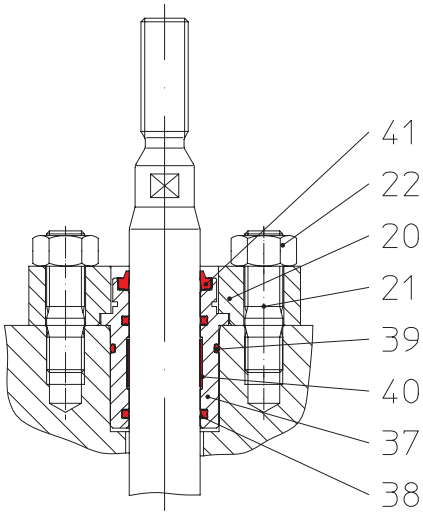

Pos.	Description	
20	Packing box flange	X10CrNi18-8, 1.4310
21	Studs	25CrMo4, 1.7218
22	Hexagon nut	C35E, 1.1181
37	Stem guiding *	X6CrNiMoTi17-12-2, 1.4571
38	Quadring *	EPDM
39	O-ring *	EPDM
40	Strip *	PTFE +25%C
41	Scraper *	NBR
* Spare parts		

EPDM-stem sealing